Aerial Park Map

Ward 2

Rose Park

Along Rock Creek south of P St. NW

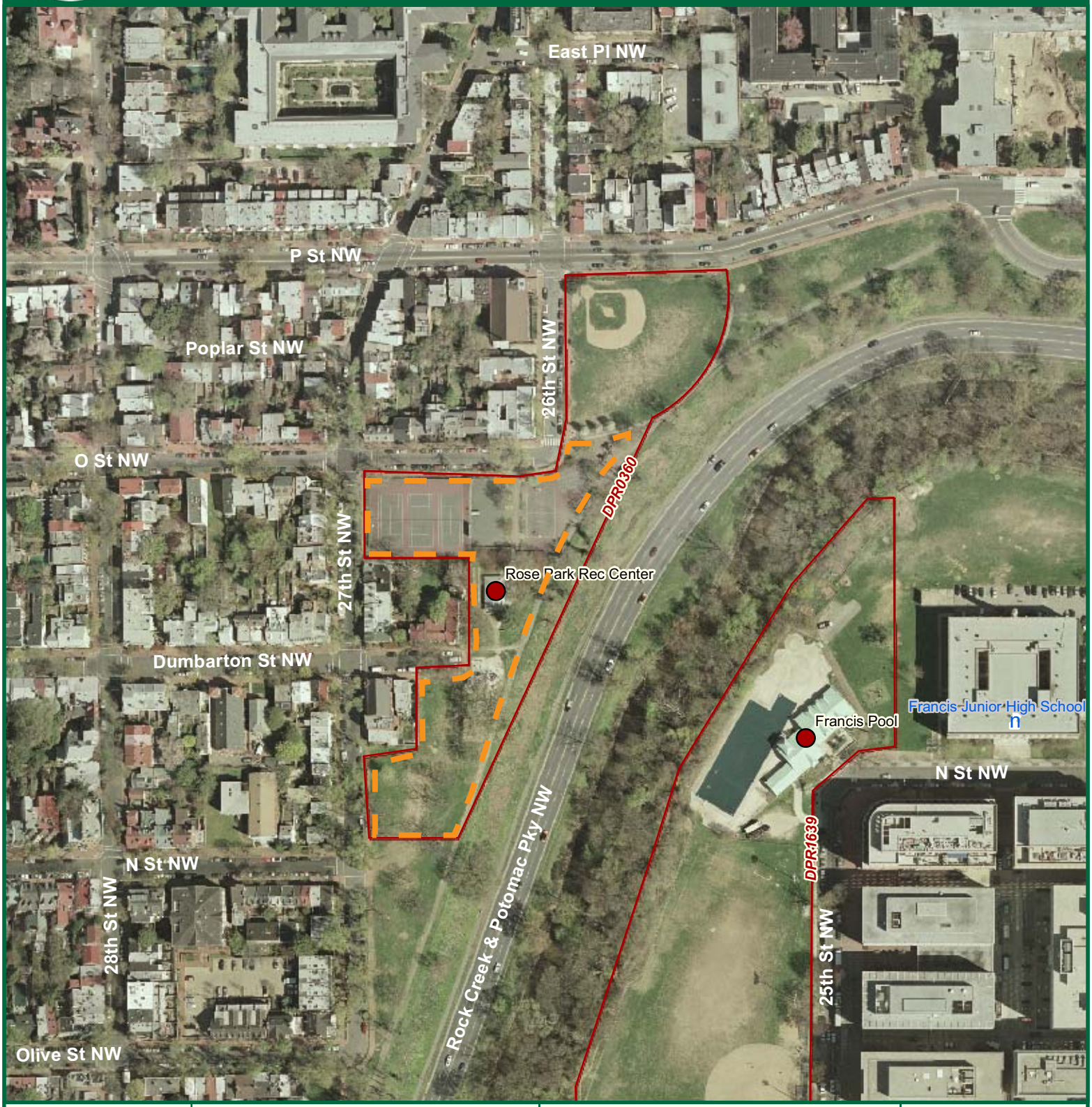

0 50 100 200

1 inch equals 200 feet

DPR Facility

Public School

DC Park boundary

Ward boundary

Project Boundary

Map: ORTHO_Rose Park
Date: Jan 26, 2007
Scale: 1:2,400
Data Source: OCTO GIS, DPR
Photo Imagery: 2005 Earthdata
Coordinate System: NAD 1983 StatePlane MD
Prepared by: DC Dept of Parks and Recreation/fob

Information on this map is for illustration only. The user acknowledges and agrees that the use of this information is at the sole risk of the user. No endorsement, liability, or responsibility for information or opinions expressed are assumed or accepted by any agency of the District ofColumbia Government.

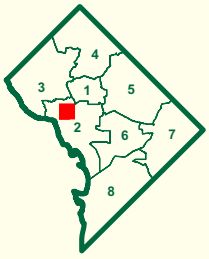

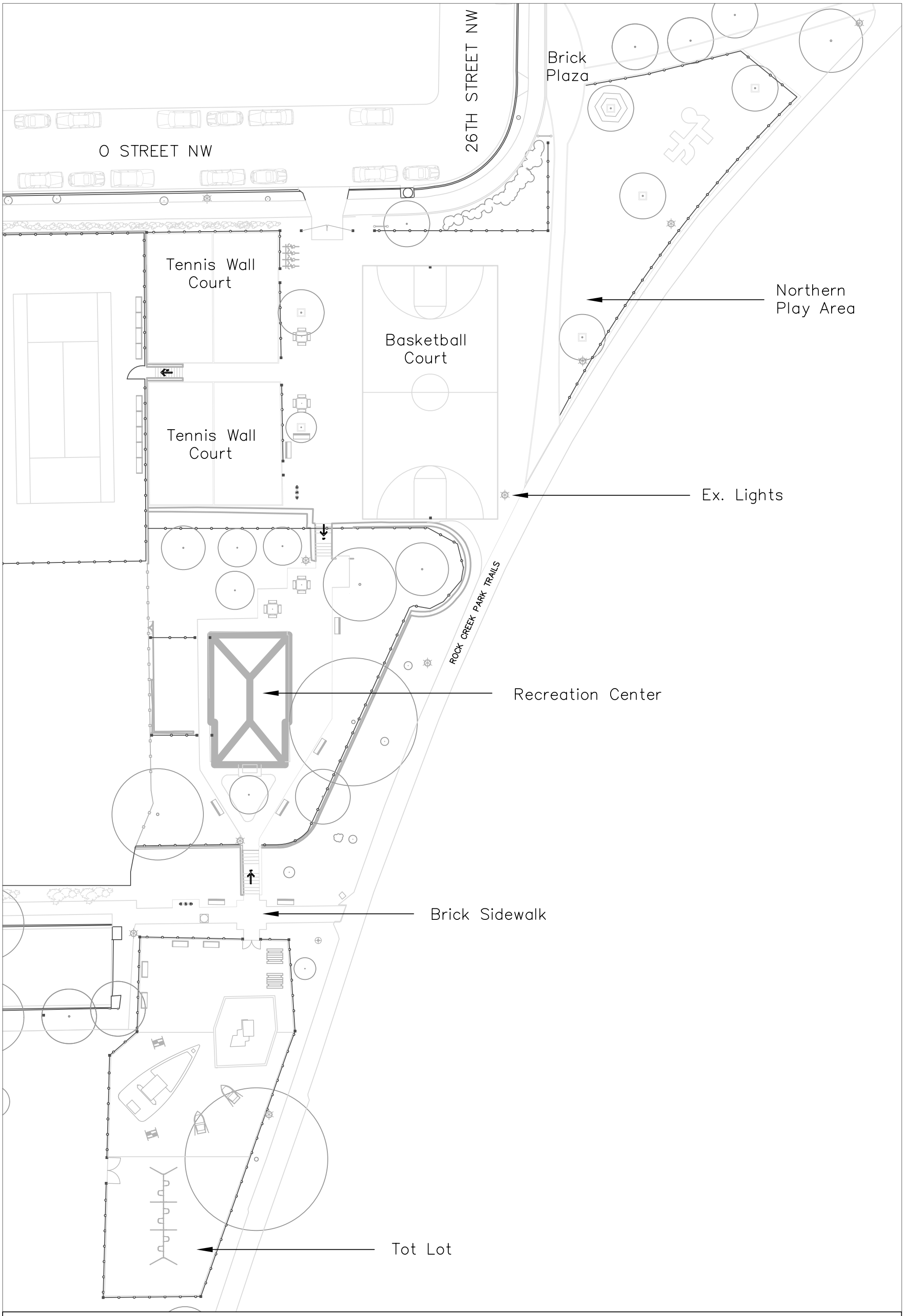

N

0' 25' 100'

Rose Park
Existing Conditions

DPR
1250 U Street, NW
Washington, DC 20009
October 25, 2013

ROSE PARK - EXISTING SITE CONDITIONS

Site amenities in poor condition

Playground surfacing in poor condition

Wear mats deteriorated

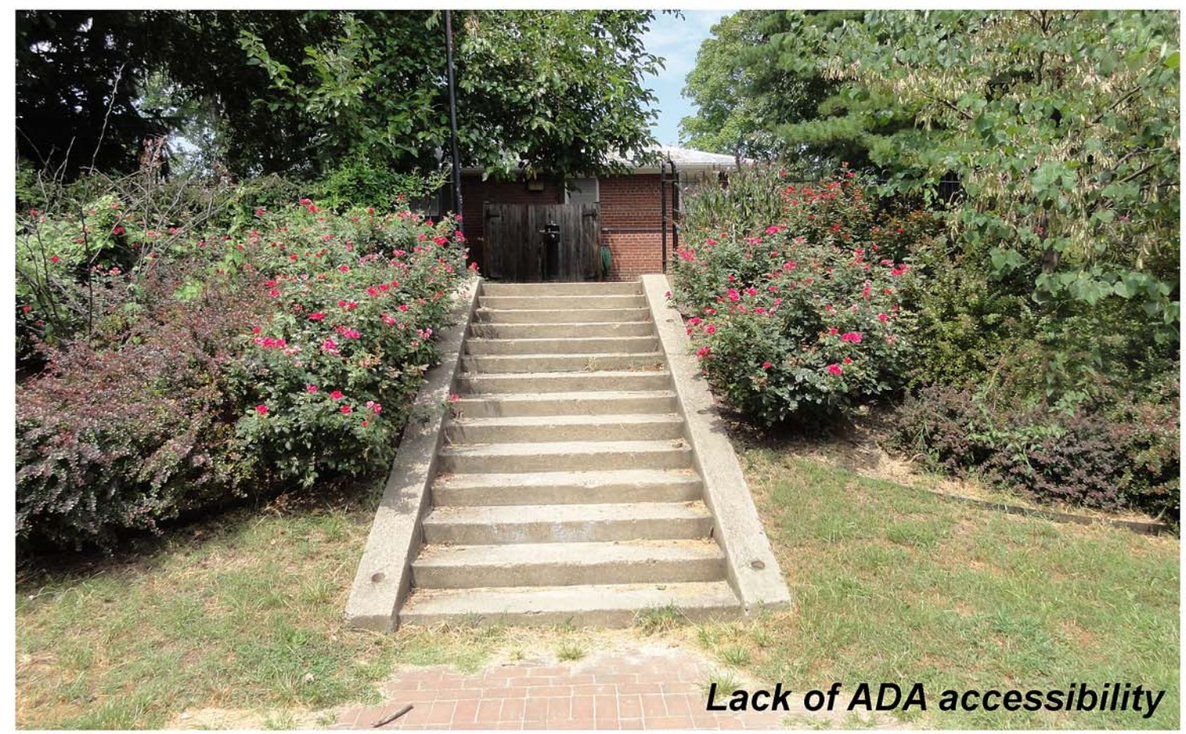

Lack of ADA accessibility

ROSE PARK - EXISTING SITE CONDITIONS

Wooden equipment prone to rotting/splintering

Court in need of resurfacing

Tripping hazards due to uneven surfaces

Lighting upgrades needed throughout park

Rose Park Conceptual Plan
October 24, 2013

DPR
DC DEPARTMENT OF PARKS AND RECREATION

KEY:

1. New Permeable Brick Paving (brick to match existing)
2. New Bike Rack
3. New Game Tables
4. New Water Fountain Location
5. New ADA Ramp to Recreation Center (Concrete)
6. New Asphalt & Stripping (Existing Practice Area)
7. Existing Tennis Court
8. Existing Basketball Court
9. New Permeable Brick Paving (extend existing paving to NPS Path)
10. New Tennis Backboard
11. New Benches
12. Existing Recreation Center
13. New Permeable Brick Paving w/ New Tree

ROSE PARK - PLAY INSPIRATION AND POSSIBILITIES

Rock Creek Park Stone Bridge

Rock Creek

Wooden Mill

Peirce Mill

Crossing the creek

ROSE PARK - DESIGN CAPABILITIES - LANDSCAPE STRUCTURES INC.

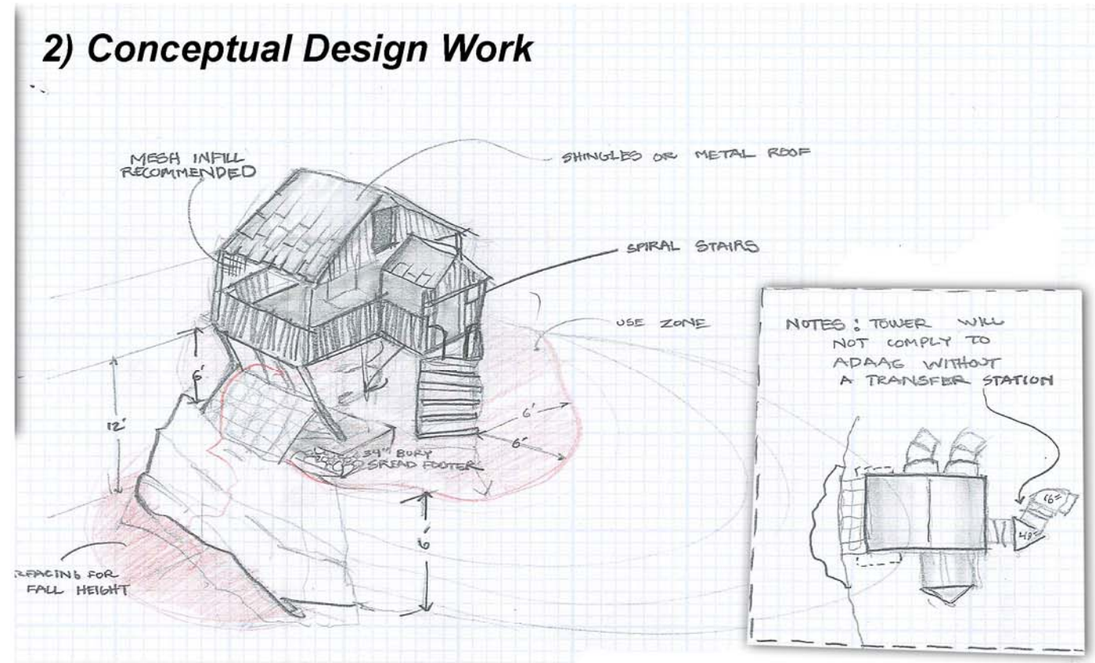

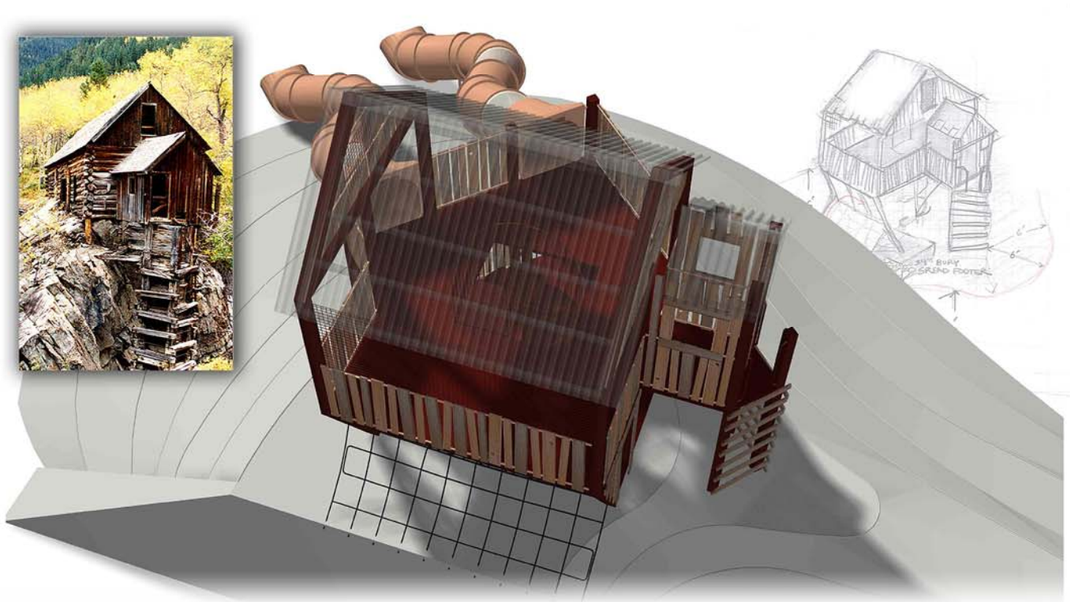

3) Engineering and Modeling

4) Final Product - Play Equipment !!!

DPR STANDARD BENCH

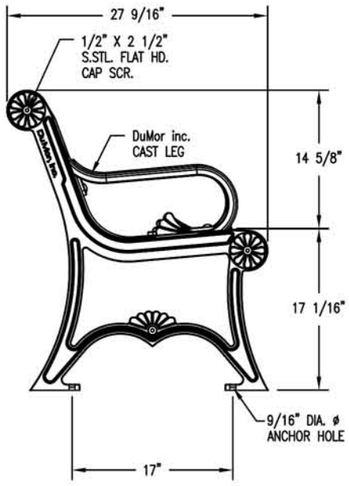

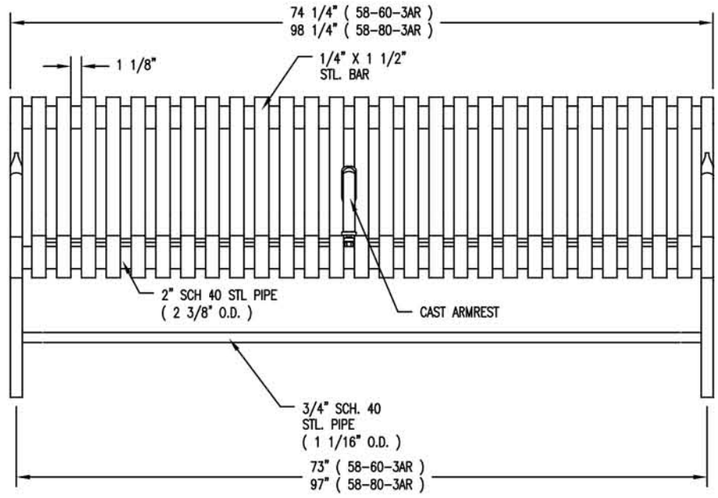

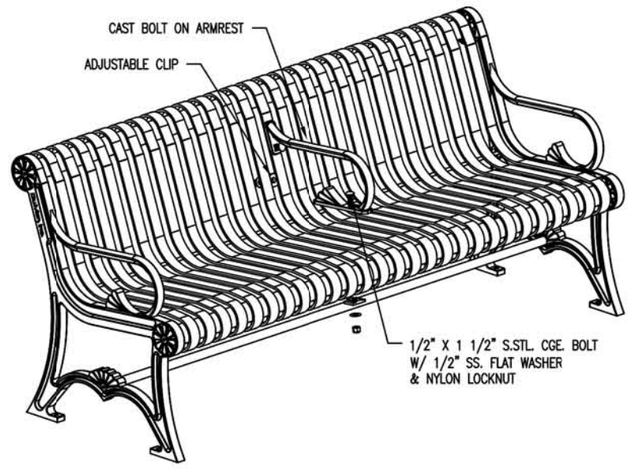

LENGTH OPTIONS

- ☐ 6' BENCH
- ☐ 8' BENCH

NOTES

1.) ALL STL. MEMBERS COATED W/ ZINC RICH EPOXY THEN FINISHED W/ POLYESTER POWDER COATING.
2.) 1/2" X 3 3/4" EXPANSION ANCHOR BOLTS PROVIDED.
3.) CUSTOM LETTERING AVAILABLE FOR RECESSED SIDE PANELS (TOTAL OF 37 SPACES)

☐ CUSTOM LETTERING (37 SPACES) _____

DuMor, inc. P.O. Box 142 Mifflintown, PA 17059-0142	DATE DRAWN : 3/22/94	TITLE	BENCH
	DRAWN BY : AWH		
	DATE REV. : 11/21/99	REVISION D	DRAWING NUMBER 58 SER-3AR SH1
	REV. BY : JSB		

DPR STANDARD TABLE

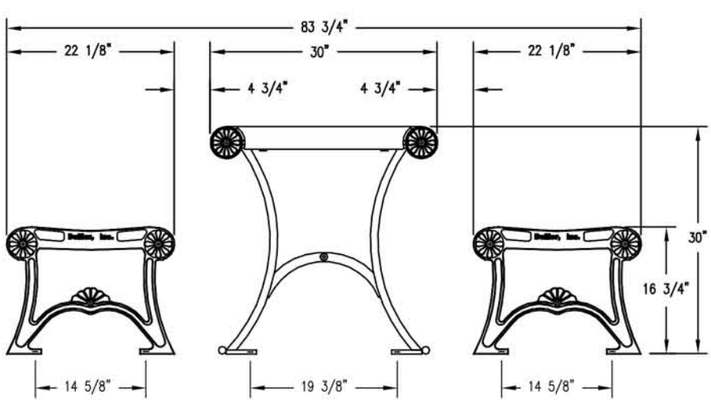

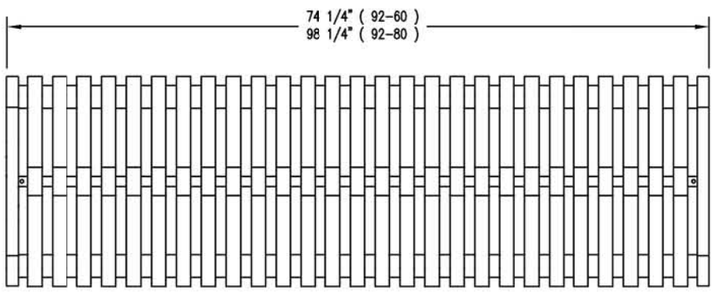

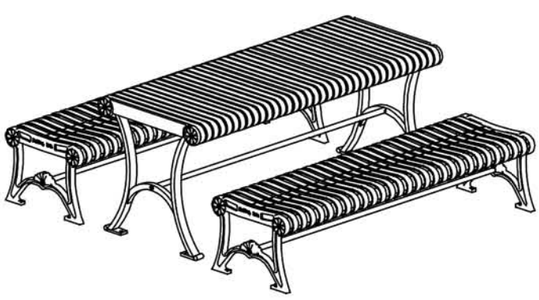

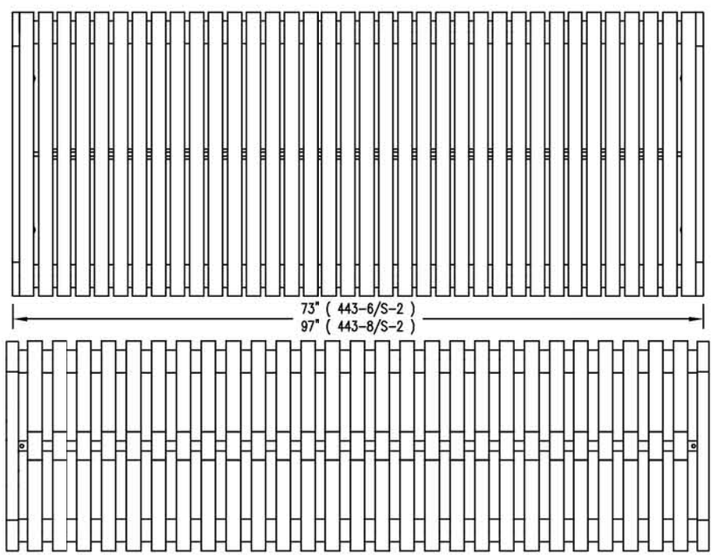

NOTE:
FOR MATERIAL AND HARDWARE SPECIFICATIONS SEE DRAWING 92 SERIES FOR BENCH AND 443 SERIES FOR TABLE.

DuMor, inc. P.O. Box 142 Mifflintown, PA 17059-0142	DATE DRAWN : 01/24/13	TITLE	TABLE
	DRAWN BY : RDH		
	DATE REV. :	REVISION A	DRAWING NUMBER 443 SER/92 SERIES
	REV. BY :		

DPR STANDARD GAME TABLE

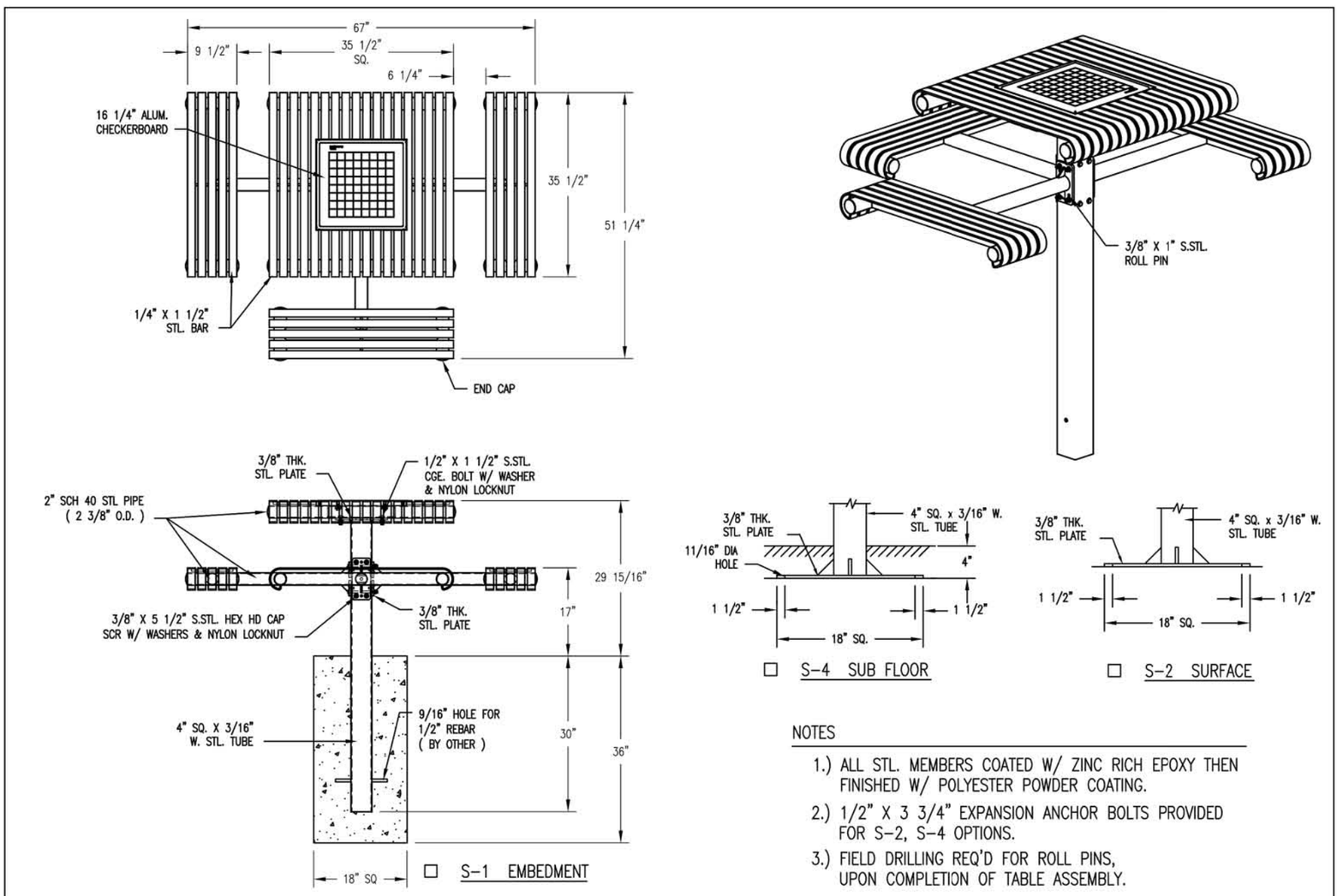

NOTES

1.) ALL STL. MEMBERS COATED W/ ZINC RICH EPOXY THEN FINISHED W/ POLYESTER POWDER COATING.

2.) 1/2" X 3 3/4" EXPANSION ANCHOR BOLTS PROVIDED FOR S-2, S-4 OPTIONS.

3.) FIELD DRILLING REQ'D FOR ROLL PINS, UPON COMPLETION OF TABLE ASSEMBLY.

DuMor, inc. P.O. Box 142 Mifflintown, PA 17059-0142	DATE DRAWN : 08/05/11	TITLE	TABLE
	DRAWN BY : ESS		
	DATE REV. : 04/18/12	REVISION B	DRAWING NUMBER 68-175-3 SH1
	REV. BY : ESS		

DPR STANDARD DRINKING FOUNTAIN

DETAIL

DATE 10/05/09

SCALE NO SCALE

FORM NA

TITLE DRINKING FOUNTAIN

DISTRICT OF COLUMBIA
DEPARTMENT OF PARKS AND RECREATION

Office of Planning & Capital Projects
Main Office: 3149 16th Street, N.W.
Washington, D.C. 20010
202-673-7647
www.dpr.dc.gov

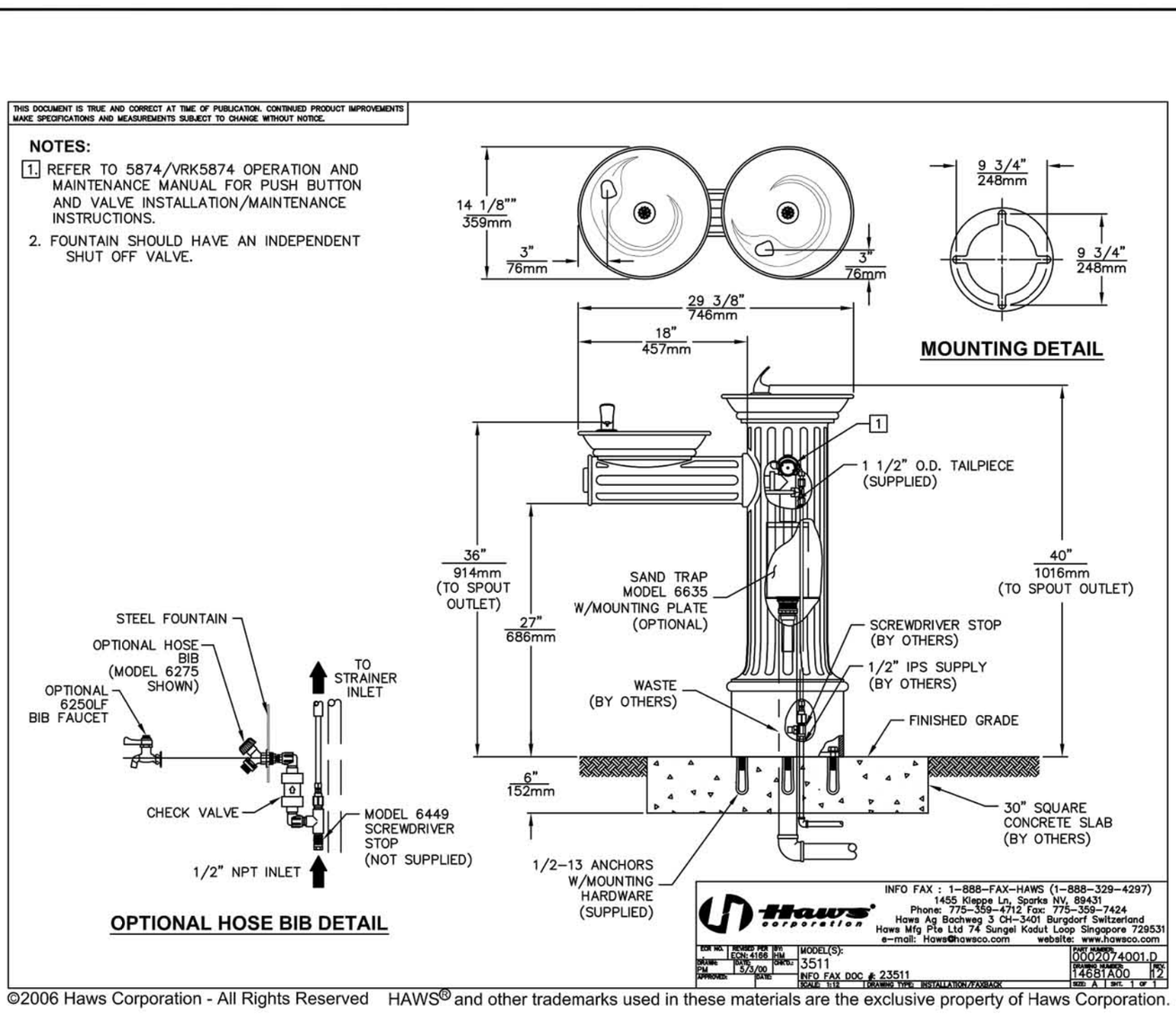

©2006 Haws Corporation - All Rights Reserved HAWS® and other trademarks used in these materials are the exclusive property of Haws Corporation.

STANDARD COLOR = BLACK

DPR STANDARD LED LUMINAIRE

Ordering Guide:

C11521: LUMINAIRE

Color:
Black

Lumilock LED specifications:

- 80, 4000K (neutral) Philips Lumileds Rebel ES LED's on aluminum core pcb, sealed acrylic lens, IP66 rated, 60,000 hrs. at 25°C ambient temperature & 70% lumen maintenance, 70 color rendering index (CRI) nominal, type V light distribution.
- Integral Philips Advance Xitanium LED driver, class 1, IP66 rated, 530mA, IntelliVolt 120–277 VAC, 50–60 Hz, RoHS compliant, field replaceable 10kV/10kA surge supression.

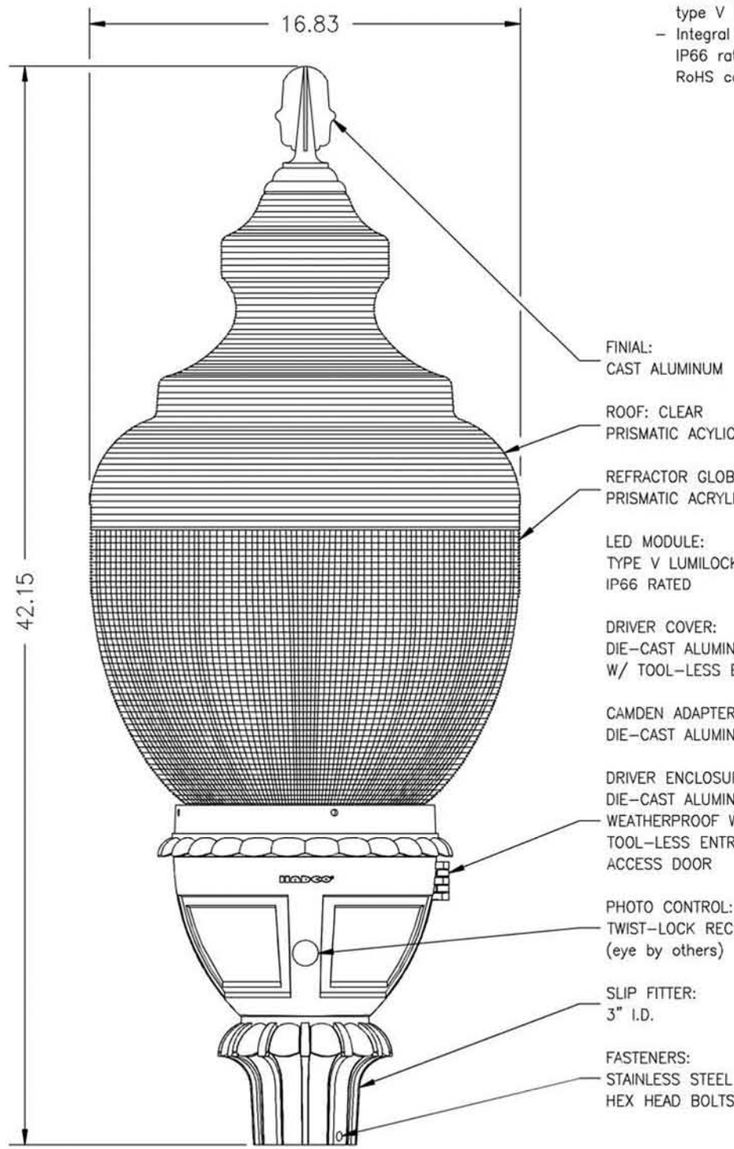

Top View
Lumilock LED Assembly

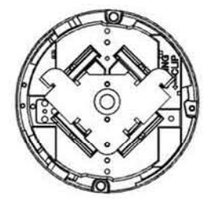

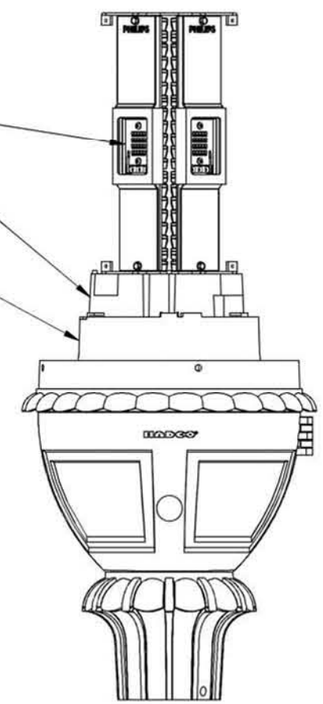

Full Specification Fixture Drawing

NOTICE:
THIS DRAWING IS FOR REFERENCE ONLY. CHECK FOR LATEST REVISION PRIOR TO ORDERING

PHILIPS HADCO

100 Craftway Drive
Littlestown, Pa 17340
Phone 800-331-4185
Fax 717-359-9289
www.hadco.com

JOB NAME:

REP. TERRITORY: 142

CONFIDENTIAL:
This drawing is confidential and proprietary to Philips Hadco and may not be reproduced without the express written consent of Philips Hadco. Any use hereof or of any of the information or detail herein shall be for the sole benefit of Philips Hadco.

PRODUCT APPROVALS	
HADCO	JAZ
CUST.	

SCALE:	DATE:	DRAWN BY:	DRAWING NUMBER:
1:6		SMK	C11521-DWG01
REP: Deporter, Dominick		REV: A	PCN: 13-026
		BY: .	DATE: .

DPR STANDARD LIGHT POLE

REV.	DATE	DESCRIPTION	DRN.	APPR.

"F" LEVEL CONFIG CODES		
OPTION CLASS	ENTRY	INFO.
COATING	I	
HH COVER	66516E	
DOOR SCR	STD	
MISC. MOD	MODFE	NOTE 8

"P" LEVEL CONFIG CODES		
OPTION CLASS	ENTRY	INFO.
MIX	6P	
FINISH	5	
COLLAR	65810EPA	ROUND
POLE TOP CON.	MOD39	
STRUC. MOD	MODDCI	NOTE 9
MISC. MODS	MODCEM	NOTE 7

SMALL EMBEDDED ROUND POLE

POLE DESIG-NATION	POLE HEIGHT ABOVE GRADE	EM-BEDDED DEPTH	OVER-ALL LENGTH	BUTT DIA.	ULTIMATE G.L. MOMENT (ft.-lbs)	POLE WEIGHT (lbs.)
SER05SPL	16'-5"	3'-7"	20'-0"	6-11/16"	8,400	380

( ) POLES REQUIRED EACH WITH W3 CAST ALUMINUM TENON ASSEMBLY 3" O.D. X 3" LG. (P/N: 40094EPAA) & "N" BASE ASSEMBLY (P/N:40021EPAA)

NOTES:

1. MIX (6P5I): BLACK PEBBLESTONE, LIGHTLY EXPOSED AGGREGATE FINISH WITH AMERSHIELD ANTI-GRAFFITI COATING.
2. ASTM C-150 TYPE III GRAY CEMENT.
3. f'c @ 28 DAYS=7,000 PSI, USING SPUN CYLINDER TEST.
4. f'c @ 28 DAYS=5,000 PSI, USING ASTM C-31 CYLINDER TEST.
5. POLES MANUFACTURED TO ASTM C-1089-13 SPECIFICATIONS.
6. PROTECTIVE COAT EXPOSED P.C. WIRES AT POLE ENDS.
7. MODCEM: CABLE ENTRANCE 2-1/4" x 9" @ 0° AS SHOWN.
8. MODFE: POLE BOTTOM PREPARATION FOR FREEZING OR CORROSIVE COASTAL ENVIRONMENT; SEE DOCUMENTATION.
9. MODDCI: CORROSION INHIBITOR MIX MODIFICATION.
10. THE POLE (& IMPLIED TENON TOP ASSEMBLY) DEPICTED ON THIS DRAWING IS DESIGNED TO WITHSTAND THE LOADS IMPARTED BY A SINGLE ACORN OR GLOBE POST TOP TYPE LUMINAIRE (NOT TO EXCEED 2.5 SQ. FT. EPA, 60 LBS) PER THE 2009 AASHTO LTS-5 IN A 130 MPH WIND ZONE (3-SECOND GUSTS). NO TORSIONAL (ARM OR TWIST) LUMINAIRE LOADS ANALYZED. PLEASE ADVISE IF INTENDED LOADING EXCEEDS THESE VALUES.

APPROVED BY

DATE

NOV Ameron Pole Products

TAKOMA RECREATION CENTER
WASHINGTON, DC
SER05SPL POLES WITH TENON ASSEMBLY

THIS DOCUMENT CONTAINS INFORMATION WHICH IS PROPRIETARY TO NOV AMERON. IT SHALL NOT BE REPRODUCED, USED OR DISCLOSED TO ANYONE WITHOUT THE PRIOR WRITTEN PERMISSION OF NOV AMERON.

DRAWN: T.L. 05/13 | SCALE N.T.S. | DWG. NO. 1305-008 | REV

CHK'D:

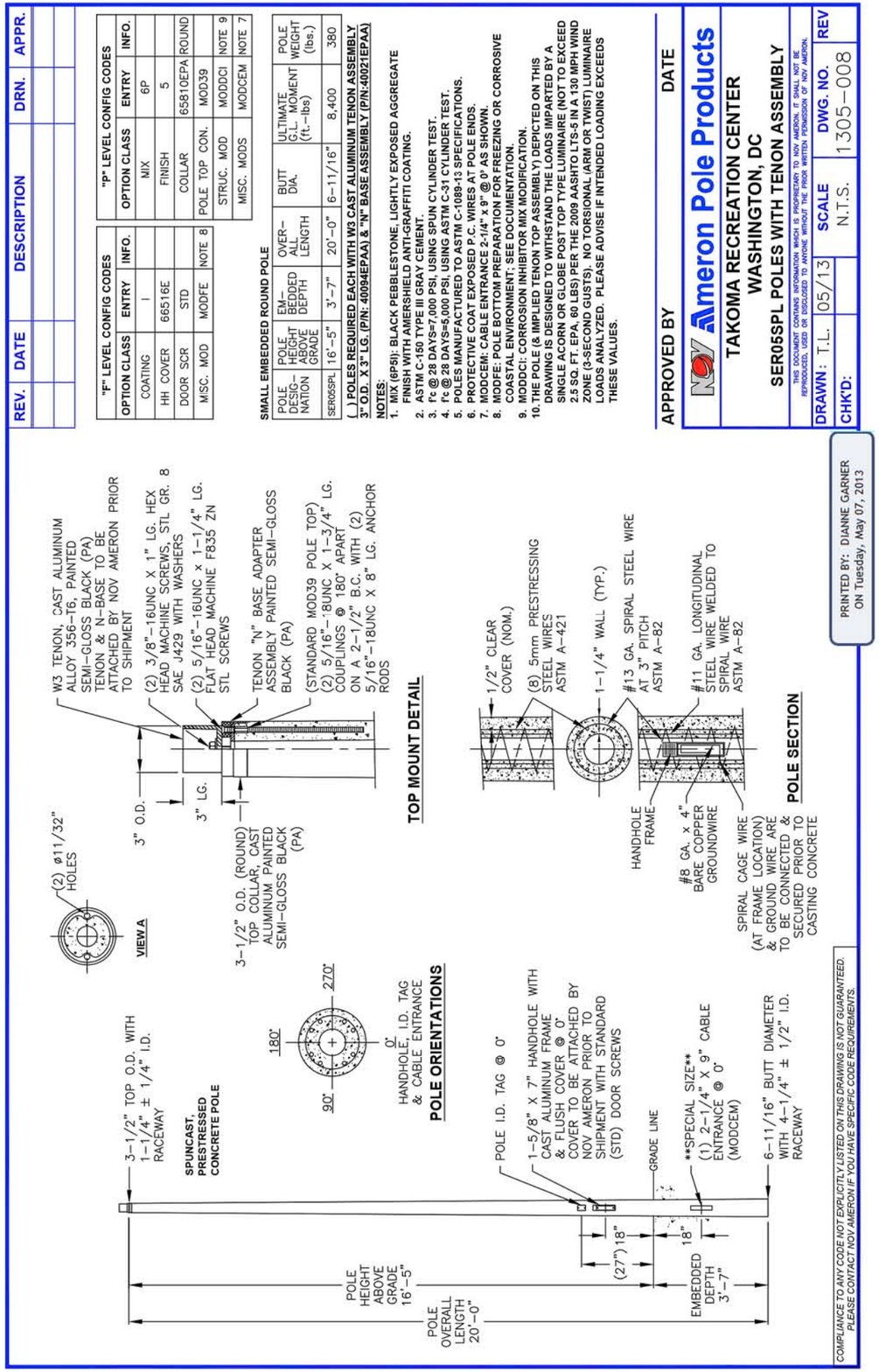

COMPLIANCE TO ANY CODE NOT EXPLICITLY LISTED ON THIS DRAWING IS NOT GUARANTEED. PLEASE CONTACT NOV AMERON IF YOU HAVE SPECIFIC CODE REQUIREMENTS.

PRINTED BY: DIANNE GARNER
ON Tuesday, May 07, 2013

DPR STANDARD LITTER RECEPTACLE

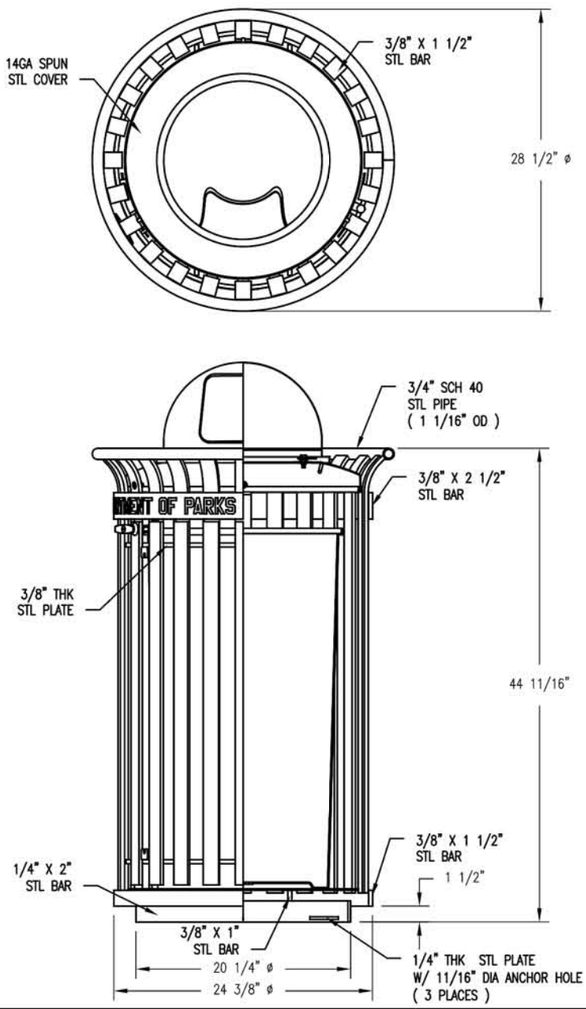

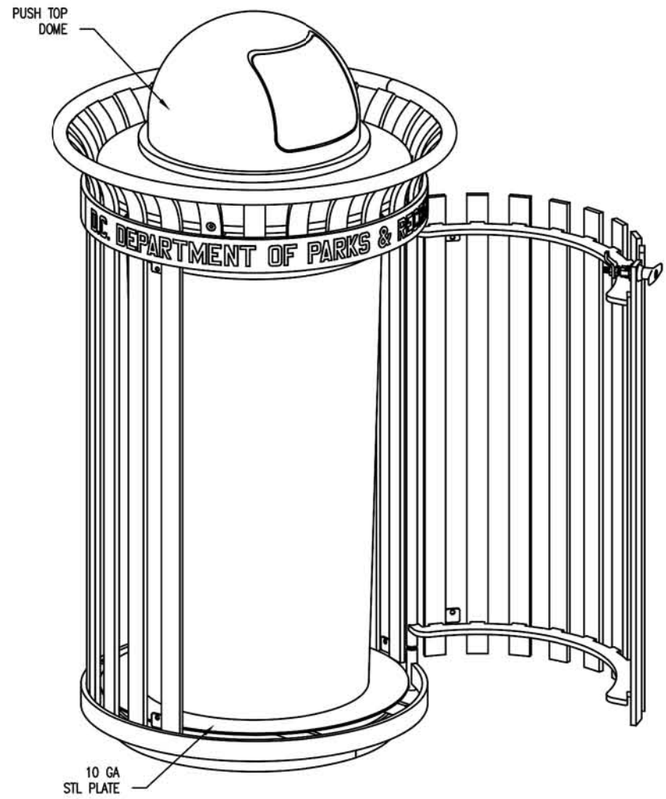

NOTES:

1.) ALL STL. MEMBERS COATED W/ ZINC RICH EPOXY THEN FINISHED W/ POLYESTER POWDER COATING.
2.) 1/2" X 3 3/4" EXPANSION ANCHOR BOLTS PROVIDED.
3.) ALL WELDS CONT. THEN GROUND SMOOTH.
4.) RECEPTACLE FULLY ASSEMBLED AT FACTORY.

DuMor, inc. P.O. Box 142 Mifflintown, PA 17059-0142	DATE DRAWN : 07/06/12	TITLE	RECEPTACLE
	DRAWN BY : ESS		
	DATE REV. :	REVISION A	DRAWING NUMBER 438-32-0004-PT
	REV. BY :		

DPR STANDARD BIKE RACK

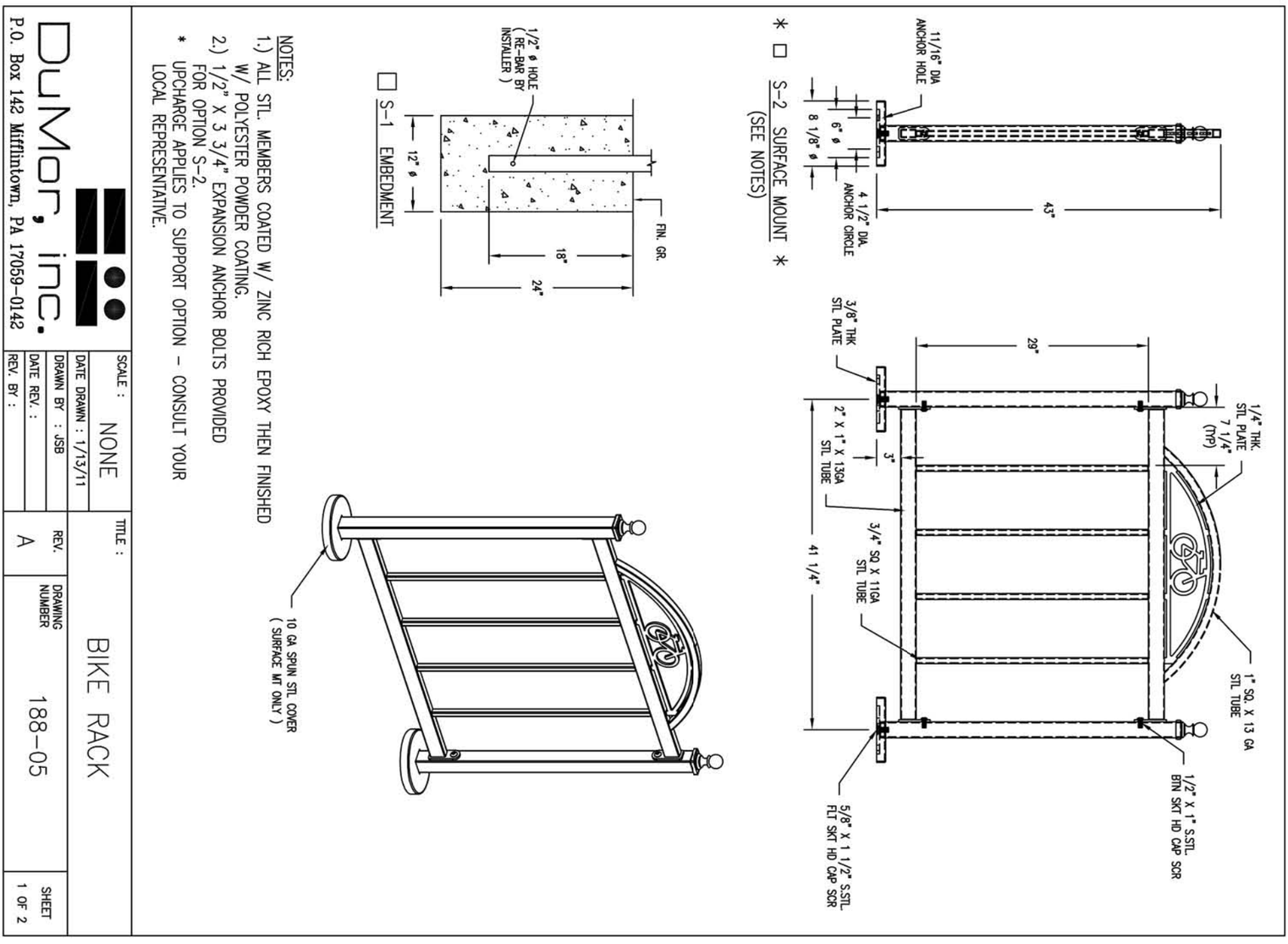

NOTES:

1.) ALL STL. MEMBERS COATED W/ ZINC RICH EPOXY THEN FINISHED W/ POLYESTER POWDER COATING.
2.) 1/2" X 3 3/4" EXPANSION ANCHOR BOLTS PROVIDED FOR OPTION S-2.

* UPCHARGE APPLIES TO SUPPORT OPTION - CONSULT YOUR LOCAL REPRESENTATIVE.

DuMor, inc. P.O. Box 142 Mifflintown, PA 17059-0142	SCALE : NONE	TITLE : BIKE RACK	
	DATE DRAWN : 1/13/11		
	DRAWN BY : JSB		
	DATE REV. :	REV. A	DRAWING NUMBER 188-05
	REV. BY :		SHEET 1 OF 2

DPR STANDARD PERMEABLE PAVING (to match existing stone on site)

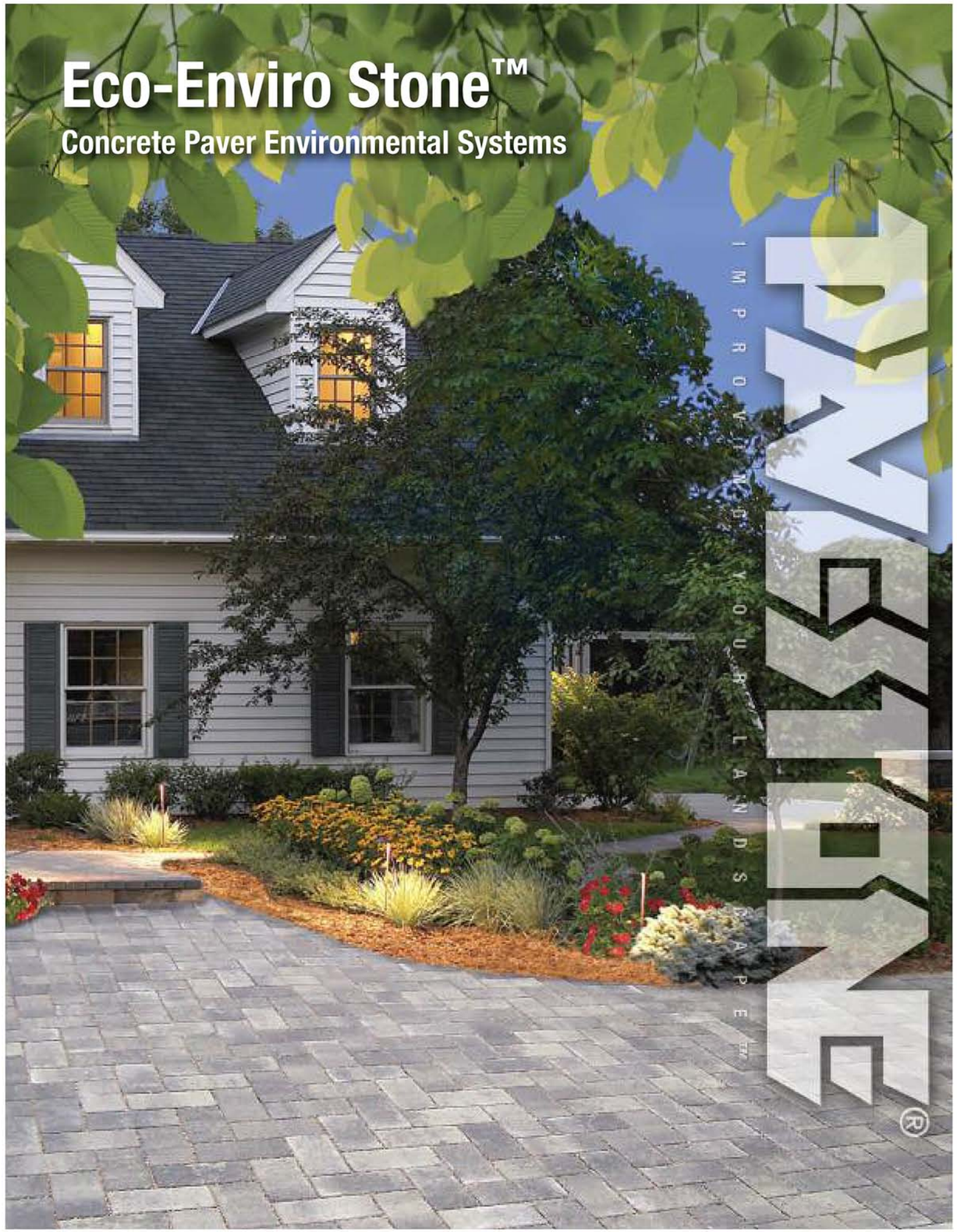

Eco-Enviro Stone™

Pavestone Eco-Enviro Stone™ is the sustainable solution for permeable pavements. Eco-Enviro Stone™ is produced in a 120mm x 240mm rectangular module that is 80mm inch thickness with an interlocking joint and a micro-chamfered top edge profile. This ingenuity is singular to the Pavestone Eco-Enviro Stone™ product and insures optimum pavement performance unequaled in the permeable paver industry. The unique Eco-Enviro Stone™ joint profile allows surface water to infiltrate into the pavement and its sub-layers. With initial permeability average flow rates of over 200 inches per hour, the Eco-Enviro Stone™ product, even with a clogging factor, will still meet the majority of current storm water management plans (SWMP). The structural interlocking capability is achieved by the paving unit having interlocking joints with vertically aligned horizontal interlocking spacer bars on each of its sides. These spacer bars interlock throughout the depth of the block and nest adjacently with neighboring paving units. This interlocking function resists lateral and vertical displacement when the unit is exposed to load. The dynamics of pavement stress are better distributed providing a structurally superior permeable paving system.

The micro-chamfered top edge profile produces a horizontal edge to edge dimension that is nominally 6mm including installation gapping. This small joint complies dimensionally with current ADA requirements for walking surfaces with spaces no greater than 1/2 inch. This narrow jointed surface diminishes vibration for wheelchairs and shopping carts when compared to all other permeable paving products. Eco-Enviro Stone™ can assist in meeting current EPA storm water regulations and LEED certification. The Eco-Enviro Stone™ product best achieves the balance of aesthetic segmental paving and the function of permeable pavement.

APPLICATIONS

Parking Lots • Driveways • Patios • Entrance Areas • Sidewalks
Terraces Garden Pathways • Pedestrian Malls • Roof Gardens • Streets

COMPOSITION AND MANUFACTURE

Eco-Enviro Stone™ is available in one size. Height = 80mm. Eco-Enviro Stone™ is made from a "no slump" concrete mix made under extreme pressure and high frequency vibrations. Eco-Enviro Stone™ has a compressive strength greater than 8000 psi, a water absorption maximum of 5% and will meet or exceed ASTM C-936.

Note: Requires modifying the ASTM C 140 - Paver Annex A4 - "The test specimen shall be 60 ± 3 mm thick and, if necessary, cut to a specimen size having a Height/Thickness (width) [H/T] aspect ratio of 0.6 ± 0.1

INSTALLATION

1. Excavate unsuitable, unstable or unconsolidated subgrade material. Compact the area, which has been cleared as per the engineer's of record (EOR) requirements. Backfill and level with open graded aggregates as per the EOR's structural and hydraulic design.
2. Place bedding course of hard and angular material conforming to the grading requirements of ASTM No. 8 or No. 9 to a uniform minimum depth of 1 1/2" -2". (38mm-50mm) screeded to the grade and profile required.
3. Install Eco-Enviro Stone™ with joints approximately 1/4". (6mm).
4. Where required, cut pave stones with an approved cutting device to fit accurately, neatly and without damaged edges.
5. Tamp pave stones with a plate compactor, uniformly level, true to grade and free of movement.
6. Spread a thin layer of hard angular material conforming to the grading requirements of ASTM No. 8 or No. 9 aggregate over entire paving area.
7. Make one more pass with plate compactor to nest the aggregate and fill joints to the top.
8. Sweep and remove surplus joint material.

Complete installation & specification details are available by contacting your Pavestone Sales Representative.

Note: Permeable pavements require both civil and hydraulic engineering. All final pavements design shall be approved by a licensed engineer familiar with local site conditions, building codes and storm water management plans.

PRODUCT INFORMATION

Eco-Enviro Stone™ is available in one size. Height = 80mm

ECO-ENVIRO STONE™
(127mm x 254mm)

Eco-Enviro Stone™

Dimensions:	5" W x 10" L x 3 1/8" H*
Wt./Stone:	12.9 lbs.
Stones/Pallet:	280
Approx. Wt./Pallet:	3,634 lbs.**
Sq. Ft./Pallet:	98
Product Number:	680

* Fractional dimensions are nominal ** Does NOT included 50 lbs. for wooden Pallet.

INSTALLATION PATTERN

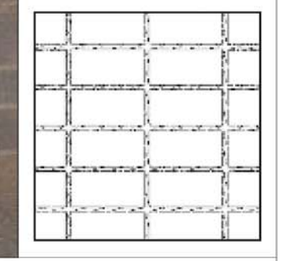

PERMEABLE PAVERS TREATMENT

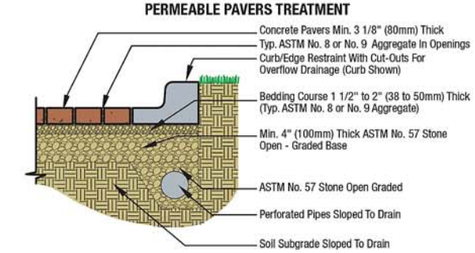

PERMEABLE PAVERS TREATMENT AND DETENTION

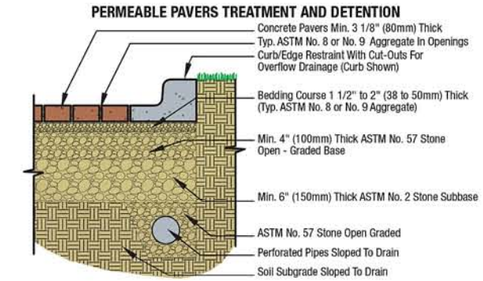

PAVESTONE®
Improving Your Landscape™
www.pavestone.com

© 2010 by Pavestone Company. All Rights Reserved. PAVESTONE, Improving Your Landscape™, Eco-Enviro Stone™ are trademarks of the Pavestone Company.

• Atlanta, GA:	(770) 306-9691	• Houston, TX:	(281) 391-7283
• Austin/San Antonio, TX:	(512) 558-7283	• Kansas City, MO:	(816) 524-9900
• Boston, MA:	(508) 947-6001	• Las Vegas, NV:	(702) 221-2700
• Cartersville, GA	(770(607-3345	• New Orleans, LA:	(985) 882-9111
• Charlotte, NC:	(704) 588-4747	• Phoenix, AZ:	(602) 257-4588
• Cincinnati, OH:	(513) 474-3783	• St. Louis/ Cape Girardeau, MO:	(573) 332-8312
• Colorado Springs, CO:	(719) 322-0101	• Sacramento/ Winters, CA:	(530) 795-4400
• Dallas/Ft. Worth, TX:	(817) 481-5802		
• Denver, CO:	(303) 287-3700		
• Hagerstown, MD:	(240) 420-3780		

Member of ASLA and NCMA ICPI Charter Member World Wide Pavers

SKU# CDC 347 7/10

Rally Master Backboards® Deliver Quality & Value

Whether you prefer a conventional flat backboard or a back-sloped backboard we've got you covered. Compare our products with any other brand. The more homework you do the better we look. No one delivers quality and value better than Rally Master Backboards®. Best of all, Rally Master Backboards cost less, have the longest warranty in the industry and usually ship within one week.

Optional 5'-High Catch Net

Our heavy-duty, black, UV-stabilized catch net is mounted to the top of the backboard. The net support frame is made of powder-coated steel tubing and super-strength, corrosion-resistant connectors.

Panel Construction

Rally Master panels are solid-core, dense plastic with the rich color molded directly into the panel. Density and flexibility combine to make Rally Master the most durable backboard on the market. Our product includes an industry-leading 20-year warranty.

Vandal Resistance

The unique Rally Master panel design combines solid dense plastic, enhanced with unmatched flexibility and strength. No fiberglass or hollow core backboard can stand up to constant use and abuse better than Rally Master.

New and Improved Mounting System

We've made installation even simpler than before by developing a faster panel mounting system. It provides a universal fence bracket that allows the installer to quickly adjust the strut alignment to compensate for fence posts that are slightly bent or out of plumb.

Versatility

Backboard practice is also great for lacrosse, soccer, and basketball. These uses can ruin other types of backboards.

Corrosion-resistant Hardware

Panels are mounted to heavy-duty, galvanized cross braces that are attached to vertical posts using galvanized hardware for unmatched durability.

Permanent Net Line

Forget replacing net lines made of flimsy tape. Rally Master lines are permanently etched into the panels.

Reduced Sound

Our vibration dampners reduce backboard noise. Decibel reading tests indicate that a tennis ball hitting a Rally Master Backboard is no louder than a tennis ball hitting a tennis racket, and quieter than a basketball being dribbled on an asphalt basketball court.

Flat Backboard Model Shown Above